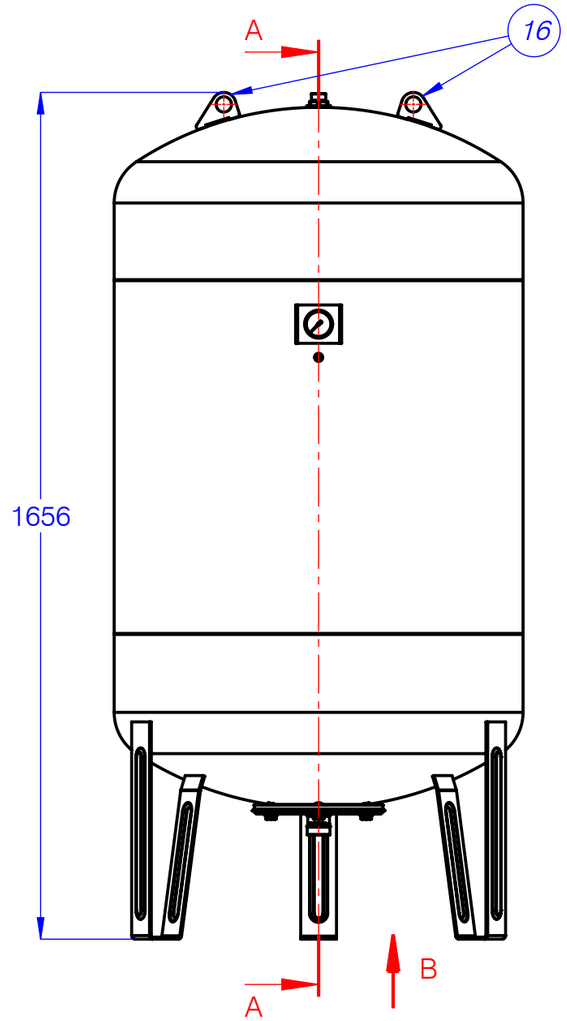

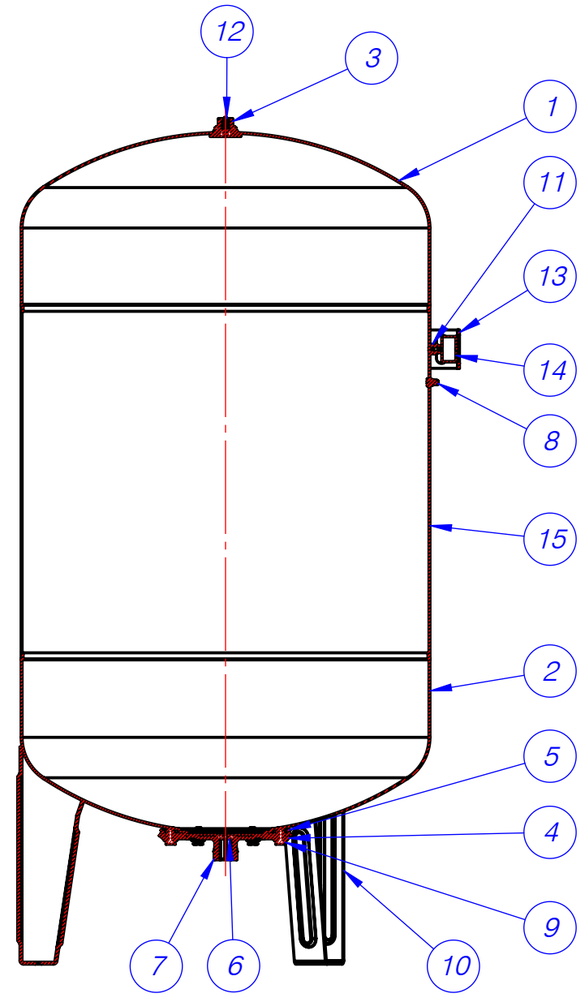

SECTION A-A

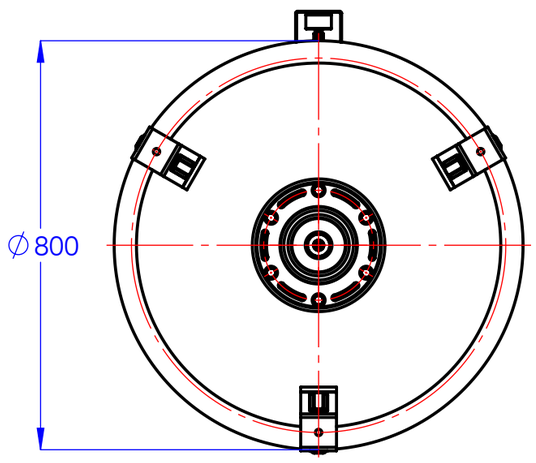

VIEW B

NO	PART NAME	MATERIAL	PCS.
1	TOP DISHED HEAD	6112	1
2	BOTTOM DISHED HEAD	6112	1
3	3/4" SCREW PROTECTION PLUG	İ20	1
4	Ø240 x 1 1/4" OUTER FLANGE	6112	1
5	Ø240 INNER FLANGE	6112	1
6	Ø240 FLANGE FILTER	MOBLEN	1
7	1 1/4" SCREW PROTECTION PLUG	İ20	1
8	AIR VALVE	BRASS	1
9	M12 x 25 BOLT	1040	6
10	LEG	6112	3
11	1/4" SLEEVE	1040	1
12	MA100 MEMBRANE HANGER SET	1040	1
13	MANOMETER CAGE	6112	1
14	MANOMETER 0-10 BAR		1
15	SPACER TUBE	6112	1
16	HANGER	6112	2

ABSOLUTE TANK			CHAMFER AND BREAK SHARP EDGES		DIMENSIONS ARE IN MILLIMETERS
	NAME	SIGN.	DATE	MATERIAL	
DRAWING	Mehmet ÇETİN		1.02.2025	THICKNESS	e:2 mm.
CONTROL	E. Murat ÖZCAN			WEIGHT:	77,4 Kg.
APPROVAL				VOLUME:	750 Liter
PRODUCTION			WORKING PRESSURE:		10 Bar
QUALITY			TEST PRESSURE:		14,3 Bar

PART NAME:

750 LITER DM EXPANSION TANK

DRAWING NO: 250121-40

PAGE 1 / 1

SCALE 1:12

A3